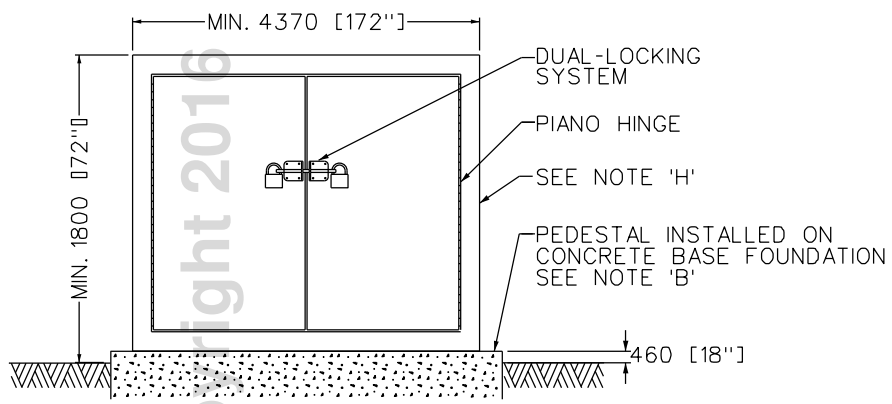

FRONT VIEW

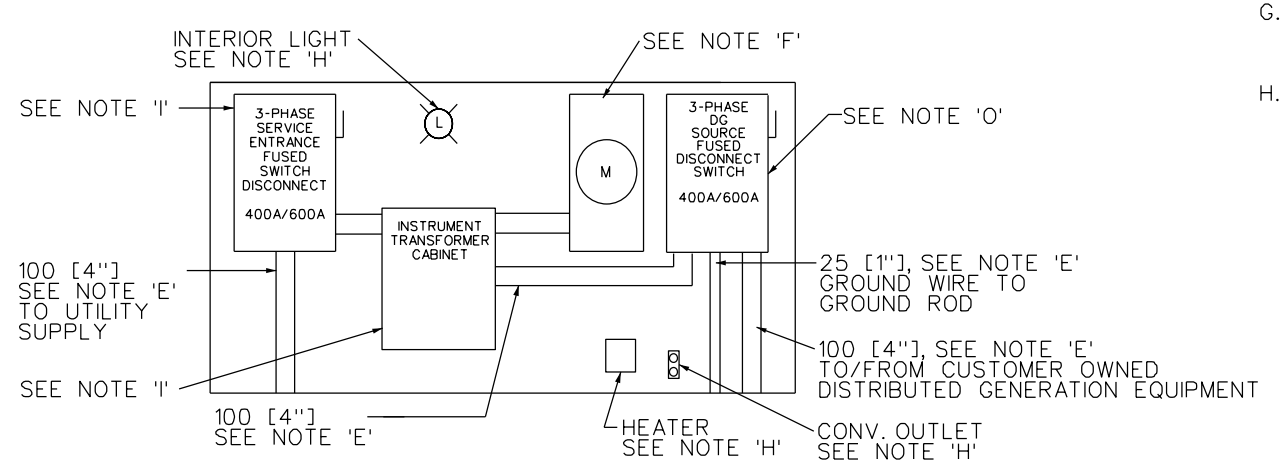

INSIDE VIEW
DISTRIBUTED GENERATION EQUIPMENT LAYOUT
REFER TO HYDRO OTTAWA SPECIFICATION MCS0087 FOR WIRING DETAILS.

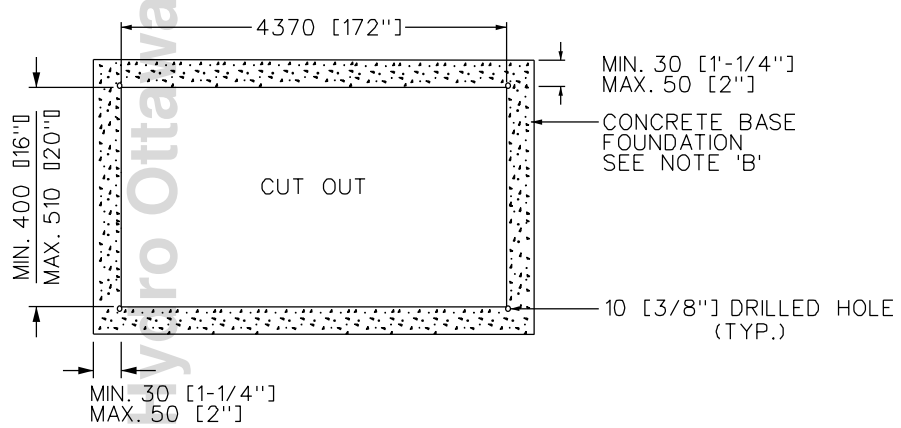

BOTTOM VIEW

NOTES:

A. ALL DIMENSIONS ARE IN MILLIMETERS, UNLESS OTHERWISE SPECIFIED.

B. REFER TO HYDRO OTTAWA SPECIFICATION MCS0035 FOR CONCRETE BASE FOUNDATION REQUIREMENTS.

C. PEDESTAL TO BE AS CLOSE AS PRACTICABLE TO, AND WITHIN EASY SIGHT OF, SUPPLYING TRANSFORMER.

D. MINIMUM OF 1000 [3' 4"] OF CLEARANCE REQUIRED IN FRONT OF EDGE OF ENCLOSURE DOORS WHILE IN ITS OPEN POSITION.

E. CONDUIT SHALL BE MIN. SCHEDULE 80 RIGID PVC CONDUIT.

F. REFER TO HYDRO OTTAWA REVENUE METERING SPECIFICATION GCS0008, TABLE 5A, FOR LIST OF APPROVED METER SOCKETS.

G. REFER TO HYDRO OTTAWA SPECIFICATION:
   i. MCS0079 FOR 'OPTION 1' CONSTRUCTION DETAIL.
   ii. MCS0089 FOR 'OPTION 2' CONSTRUCTION DETAIL.

H. METER CABINET MUST BE SUPPLIED WITH:
   i. NEMA-4 OR NEMA-4X OUTDOOR ENCLOSURE.
   ii. FORMED 14AWG STEEL BODIES AND DOORS.
   iii. PIANO HINGED DOORS.
   iv. SECURE LATCHING SYSTEM.
   v. DUAL- LOCKING SYSTEM THAT CAN ACCEPT STANDARD HYDRO-OTTAWA PADLOCK WITH [3/8"] SHACKLE.
   vi. SMOOTH CONTINUOUS WELDED SEAMS CONSTRUCTION.
   vii. ENAMEL PAINTED OR STAINLESS STEEL.
   viii. REMOVABLE INNER PANEL (16AWG) C/W COLLAR STUD.
   ix. CUT OUT AT THE BOTTOM AS PER BOTTOM VIEW.
   x. GROUND STUDS IN CABINET AND BONDING STUDS ON EACH DOOR.
   xi. THREE POINT DOOR LATCH.
   xii. 120V, 15A, CONVENIENCE OUTLET. PROTECTED BY DEDICATED 15A BREAKER.
   xiii. LIGHTING AND HEATING AS PER HYDRO OTTAWA SPECIFICATION GCS0008.

I. DISCONNECTS, INSTRUMENTATION TRANSFORMER CABINET SHALL MEET MIN. NEMA RATING AS PER HYDRO OTTAWA REVENUE METERING SPECIFICATION, GCS0008.

J. BOLLARDS TO BE INSTALLED AS REQUIRED; REFER TO HYDRO OTTAWA REVENUE METERING SPECIFICATION GCS0008 FOR DETAILS.

K. IF THERE IS AN EXISTING DEDICATED HYDRO OTTAWA OWNED PAD-MOUNT TRANSFORMER, UP TO TWO (2) SECONDARY SERVICE CONNECTIONS MAY BE CONNECTED TO THE LOAD SIDE OF THE EXISTING TRANSFORMERS WITH HYDRO OTTAWA'S AUTHORIZATION. CONSULT WITH A HYDRO OTTAWA SERVICE LAYOUT AGENT OR DESIGN SERVICES TO DETERMINE ELIGIBILITY.

L. BACKFILL COMPACTED TO NO LESS THAN 95% OF STANDARD PROCTOR DENSITY.

M. TO BE INSTALLED AWAY FROM THE LINE OF SIGHT WHEN ON SCHEDULE "A" ROADS OR DESIGNATED HERITAGE DISTRICT AREA ROADS.

N. LOSS OF PHASE (LOP) DETECTION DEVICE TO BE INSTALLED NEAR DG SOURCE FUSED DISCONNECT BUT NOT IN THE SAME ENCLOSURE AS DG SYSTEM FUSED DISCONNECT, INSTRUMENTATION TRANSFORMER ENCLOSURE, METER SOCKET, AND DG SOURCE FUSED DISCONNECT.

O. DG SOURCE FUSED DISCONNECT SHALL HAVE FACTORY INSTALLED OVER-CURRENT PROTECTION AS PER HYDRO OTTAWA SPECIFICATION GCS0008.

DEFINITIONS:

"DG SYSTEM FUSED DISCONNECT" MEANS AN ELECTRICAL SAFETY AUTHORITY (ESA) APPROVED DEVICE WITH FACTORY INSTALLED OVER-CURRENT PROTECTION RATED AT EITHER 100% FULL-LOAD AMPS (FLA) OR 80% OF THE AVAILABLE FAULT AMPS OF THE CUSTOMER'S GENERATION OR ENERGY STORAGE EQUIPMENT, WHICHEVER IS GREATER; MOULDED CASE BREAKERS ARE NOT ACCEPTABLE. IT SHALL PROVIDE AN OBVIOUS VISIBLE OPEN POINT. THIS DEVICE IS USED TO ISOLATE THE CUSTOMER'S DISTRIBUTED GENERATION (DG) EQUIPMENT, OR ENERGY RESOURCE FACILITY (ERF) EQUIPMENT, FROM THE UTILITY DISTRIBUTION SYSTEM.

"DG SOURCE FUSED DISCONNECT" MEANS AN ELECTRICAL SAFETY AUTHORITY (ESA) APPROVED DEVICE WITH FACTORY INSTALLED OVER-CURRENT PROTECTION RATED AT EITHER 100% FULL-LOAD AMPS (FLA) OR 80% OF THE AVAILABLE FAULT AMPS FROM THE CUSTOMER'S GENERATION OR ENERGY STORAGE EQUIPMENT, WHICHEVER IS GREATER; MOULDED CASE BREAKERS ARE NOT ACCEPTABLE. IT SHALL PROVIDE AN OBVIOUS VISIBLE OPEN POINT. THIS DEVICE IS USED TO ISOLATE THE CUSTOMER'S DISTRIBUTION GENERATION (DG) EQUIPMENT, OR ENERGY RESOURCE FACILITY (ERF) EQUIPMENT, FROM THE EQUIPMENT THAT IT SUPPLIES.

REVISIONS		PREP	CHKD	APPD
REV: CHANGE:	DATE: YYYY-MM-DD			
REV: CHANGE:	DATE: YYYY-MM-DD			
REV: CHANGE:	DATE: YYYY-MM-DD			

HydroOttawa
WWW.HYDROOTTAWA.COM

PREP: M. MIRA
CHKD: S. McNALLY P. Eng.
APPD: C. MALONE P. Eng.
DATE: 2016-01-13
SCALE: N.T.S. @ ANSIB

TITLE: ENGINEERING SPECIFICATION ERF 120V/208Y OR 347V/600Y 400A TO 600A OUTDOOR ENCLOSURE METERING PEDESTAL INSTALLATION WITH SEPARATE INSTRUMENT TRANSFORMER CABINET CONSTRUCTION DETAIL

NO: MCS0098 | 1 OF 1 | REV: 0